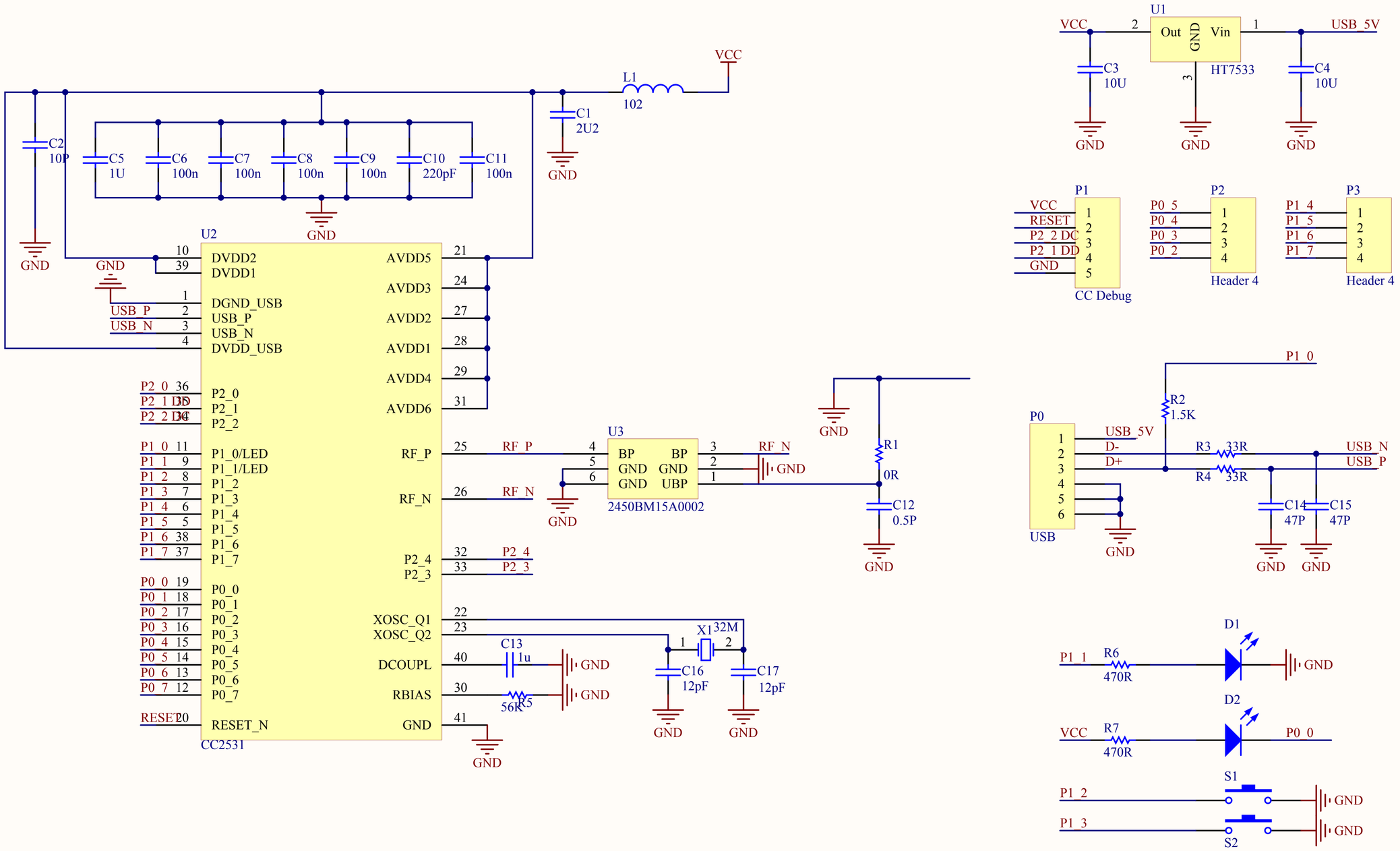


| Title | | |
|---|---|---|
| Size A4 | Number | Revision |
| Date: 2014/1/14 | | Sheet of |
| File: E:\ \..\BLE_USB_Dongle.SchDoc | | Drawn By: |